This information is brought to you by:
Aegis ELECTRONIC GROUP, INC
480-635-8400 p * aegis-g2@aegiselect.com
http://www.aegis-elec.com

USB2-EX

Datasheet - USB2.0 Output Video Transceiver

This is a family of small form factor modules for formatting and converting generic digital video streams to standard compliant formats. Different interface standards are supported from the transmitter side including DVI/HDMI, VGA, HD-SDI, SDI and USB.

The modules connect to the digital video interface of Sony's FCB-H and FCB-EX-E block cameras and support several progressive and interlace HDTV or SDTV formats. As no analog to digital conversion is done on these modules, best image quality is guaranteed for the output signals.

USB2-EX - Features

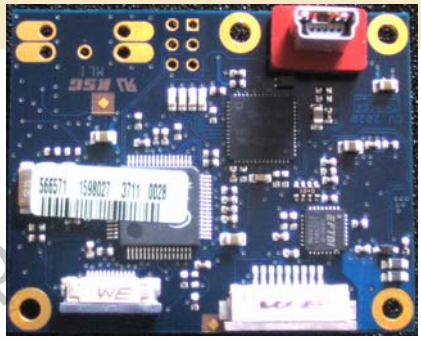

- + Connects to Sony FCB-EX-E series camera blocks
- + Supports EX1020/P, EX995E/P, and EX490E/P
- + Connects to digital video interface of camera
- + Digital progressive video output over USB2.0 highspeed interface
- + Video output on mini USB type B connector
- + Video output 720x576p25 for PAL camera models
- + Video output 720x480p30 for NTSC camera models
- + Native digital signal processing chain for best image quality (no scaling)
- + Breakout of analog CVBS video
- + Serial control interface via USB2.0 or RS232
- + Device installs as COM port at PC
- + PC USB video driver support for Window™ OS
- + Window™ based AMCAP software for video capture
- + Supply voltage: 7V to 12V DC regulated

Progessive Video Output

Aegis Electronic Group
www.aegiselect.com

Block Diagram USB2-EX

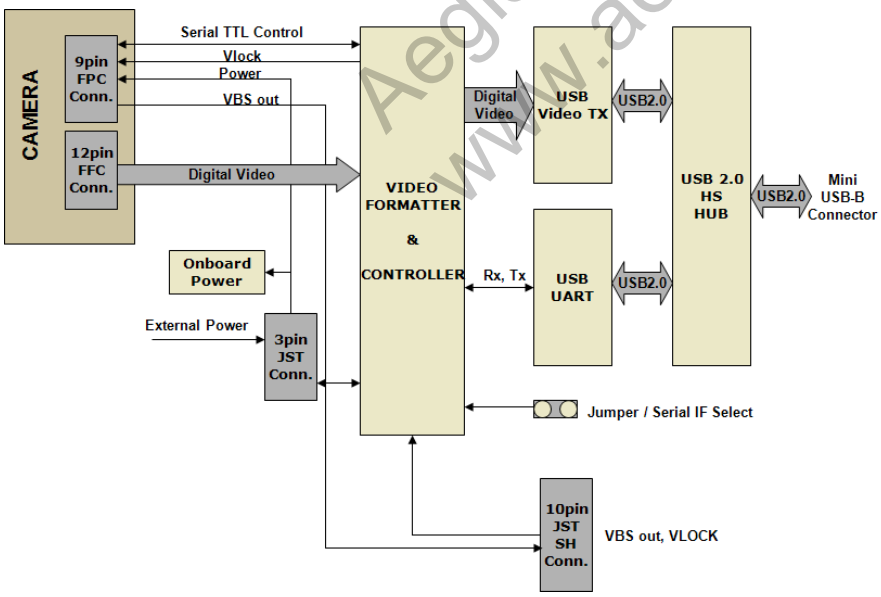

Order Codes:

USB2-EX

USB2.0 Module

Specification

INPUTS:

DATA	8 Bit LVCMOS 3.3V (from Sony FCB-EX-E)
CLOCK	LVCMOS 3.3V (from Sony FCB-EX-E)
VLOCK	LVCMOS 3.3V
CONTROL Rx	LVTTL (from Sony FCB-EX-E)
CONTROL Rx	USB2.0 (default), RS232

OUTPUTS:

CONTROL Tx	LVTTL (to Sony FCB-EX-E)
CONTROL Tx	USB2.0 (default), RS232
VIDEO	Digital serial video over USB2.0 HS CVBS direct from camera
VLOCK_CAM	LVCMOS 3.3V to camera

POWER INPUT:
7V TO 12V regulated
Power consumption (FCB-EX1020P + USB2-EX) 4.56 W (cam motors inactive)
Power consumption 2.16 W (USB2-EX only)
Power consumption values are valid for 12V DC input voltage and 25°C ambient temperature

OPERATING CONDITIONS:
Ambient Temperature (min/max): -5°C/+60°C = 23°F/140°F
Humidity: 20%-80%
STORAGE CONDITIONS:
Temperature (min/max): -20°C/+60°C = -4°F/140°F
Humidity: 20%-80%

Board Mechanical

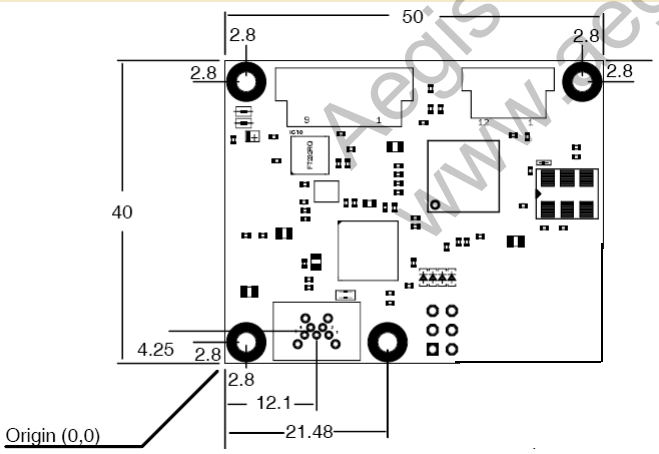

Width: 50mm

Height: 40mm

4 mounting holes, drill diameter 2.6mm, land diameter 5.2mm

Onboard Connectors

PCB Top Side:
Interfaces to/from Camera.

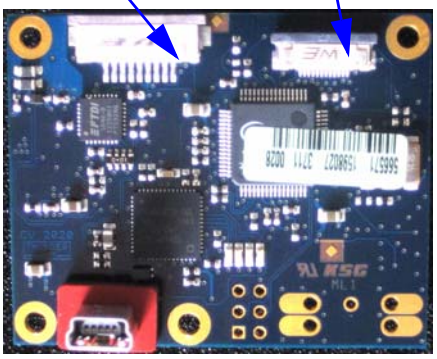

PCB Bottom Side:

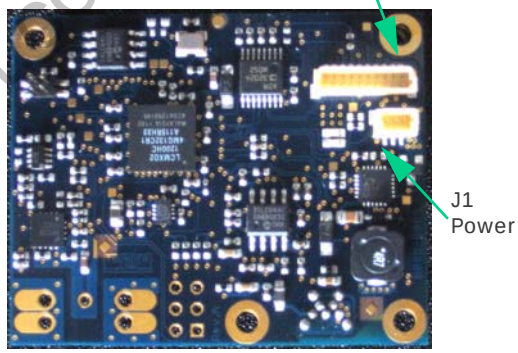

SAFETY NOTES:

FFC with contacts on opposite sides MUST be used for connecting J2 of USB2-EX to the camera.

All digital inputs (except USB on J6) are specified for maximum voltages of 3.3V.

Aegis Electronic Group
www.aegiselect.com

Connector Pin Assignment

J6 USB video output and USB control interface

(Mini USB-B type, Samtec MUSBS-05-S-B-TH-TR)

J1 JST BM03B-SSRS-TB

Power Input

1 DC IN
2 NC (keep open)
3 GND

J3 JST BM10B-SSRS-TB

CVBS Output, VLOCK Input, TTL Control IF and RS232 Control IF

1 reserved (do not connect)
2 reserved (do not connect)
3 GND
4 GND
5 CVBS_OUT
6 GND
7 VLOCK_IN (3.3V max.)
8 GND
9 RXD_RS232 (serial IF transmit)
10 TXD_RS232 (serial IF receive)

The active serial control interface can be selected by Jumper J5, Pins 2-3.

USB select (factory default):

Pins 2-3 closed

RS232 select:

Pins 2-3 open

J5
Pins 2-3

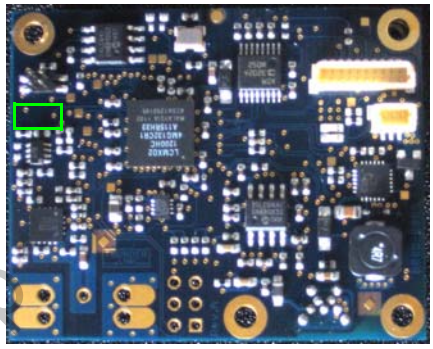

Driver and Software

Aivion provides a complete driver and software package for the USB2-EX. This includes drivers for the video streaming chip and for the USB serial control chip (USB UART).

The AMCAP video capture software can be used for viewing and recording of the captured video. It is provided on an as is basis with no further support. AMCAP is a DirectShow™ compatible application for Windows™ based computers.

In addition to AMCAP other video capture software is available on the market and might be used alternatively.

Operating system support:

- Windows XP (32bit, SP2 and higher)
- Windows 7 (32bit)
- Windows 7 (64bit)

All drivers and software is available on www.aivion.com in the USB2-EX download area. Customers must register with Aivion to get their account to access the download area. Please contact Aivion sales.

All installation procedures are common to Windows OS driver installation procedures.

Operation

The module outputs progressive video over USB2.0 with 25fps or 30fps depending on the camera used. The camera must be set to progressive mode with two identical frames,

Camera Register:

[72] = 01

[73] = 00

Windows and DirectShow are registered trademarks of Microsoft Corporation

Aegis Electronic Group
www.aegiselect.com