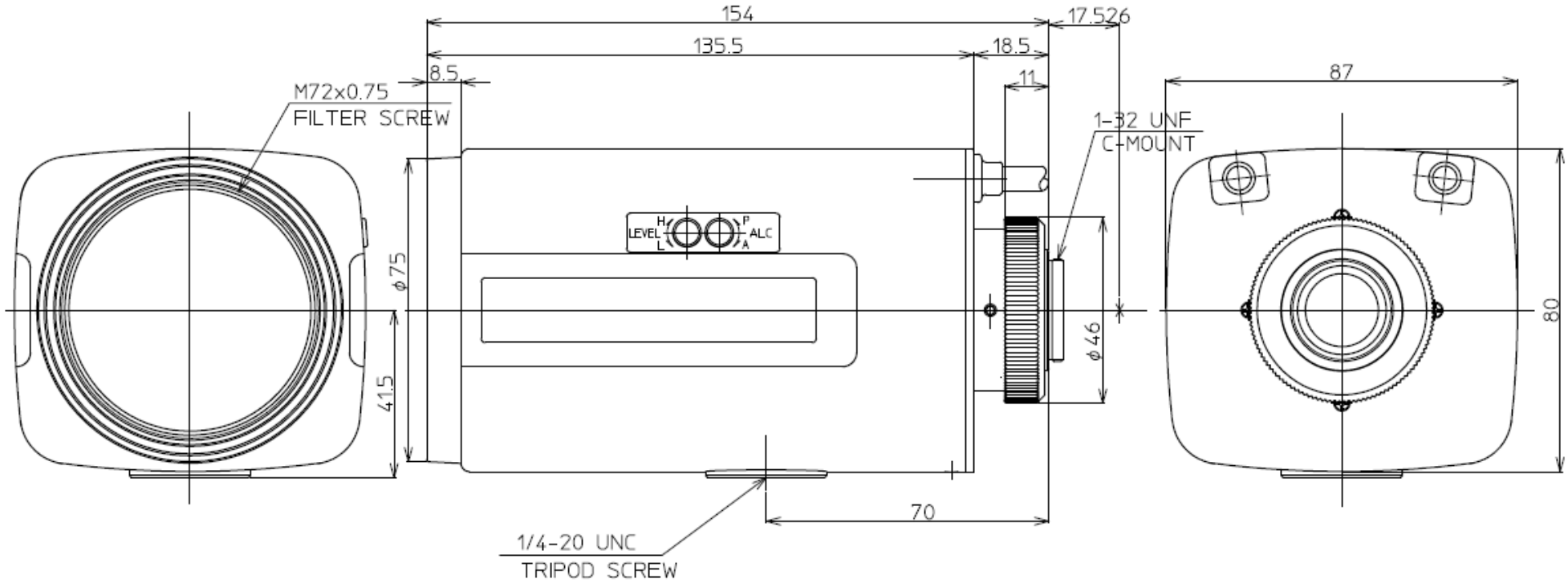

① IRIS CABLE

(+)	RED	INPUT VOLTAGE
(−)	BLACK	GROUND
	WHITE	VIDEO SIGNAL
	GREEN	REMOTE CONTROL

② MOTOR CABLE

(+)	GREEN	FOCUS NEAR
(+)	BLACK	FOCUS FAR
(+)	YELLOW	ZOOM IN
(+)	RED	ZOOM OUT

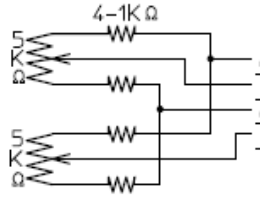

(+)	BROWN	POT. SUPPLY
	BLUE	FOCUS ERROR
(−)	WHITE	POT. RETURN
	GRAY	ZOOM ERROR

SPECIFICATION

1.	USE		FOR 2/3" COLOR ,B/W CAMERA		
2.	FOCAL LENGTH		f=10 ~100 mm		
3.	IRIS RANGE		F=1.6 ~ 500~CLOSE		
4.	IMAGE SIZE		φ 11 (8.8 x 6.6)		
5.	BACK FOCAL LENGTH		15.5 mm in air		
6	FLANGE FOCAL LENGTH		12.5 mm in air		
7	FOCUS RANGE		∞~ 1.9 m		
8	FIELD ANGLE	DIA.	(W) 58.4°	(T)	6.4 °
		HOR.	47.7°		5.1 °
		VER.	36.3°		3.9 °
9.	FIELD OF VIEW AT M.O.D.	DIA.	1991 mm		203 mm
		HOR.	1591 mm		163 mm
		VER.	1186 mm		123 mm
10.	DISTORTION TV		-0.9 %		+0.4 %
11.	LENS CONSTRUCTION		12 GROUPS		14 ELEMENTS
12.	CLEAR APERTURE		FRONT φ61.8		REAR φ22.3
13.	EXIT PUPIL POSITION		-70.0 mm		(format)
14.	WEIGHT		840 g (860 g)		

DC (DIRECT CONTROL)

DRIVE COIL	RESISTOR	190 Ω (20° C)
	COLOR	RED(+) BLACK
BRAKE COIL	RESISTOR	1150 Ω (20° C)
	COLOR	YELLOW(+) GREEN
DRIVE VOLT.	OPEN	LESS THAN +4V
	CLOSE	OVER THAN 0V
		W/CLOSING SPRING

名称 AUTO IRIS 2/3" 1.6/10-100mm

LMZ105AMR,AMPR

型番 LMZ105AMDCR,AMPDCR