Pixelink®

A NAVITAR COMPANY

M20

CMOS | SONY IMX183 | ROLLING SHUTTER

Ideal for use in any laboratory or industrial setting, Pixelink cameras let you capture high-quality images with your existing microscope equipment. We will work with you to choose and integrate the optimal USB 3.0 camera for your microscopy project. Our microscope cameras and associated software are designed to offer consistent, superior quality image acquisition and performance.

Aegis Electronic Group, Inc.

KEY FEATURES

20MP CMOS

20 FRAMES Per Sec.

2.4 µm

15.86mm

Sensor Size 1"

12 BIT

COLOR

MONO

USB 3

USB3 VISION

TYPICAL APPLICATIONS

- Live Cell Imaging
- Microbiology
- Cell Analysis
- Vision Correction
- Packaging
- Measurements
- Inspection
- Paint Analysis & Dirt Analysis

Aegis (888)687-6877
ELECTRONIC GROUP, INC
aegis-g2@aegiselect.com

Pixelink® A NAVITAR COMPANY M20

TECHNICAL SPECIFICATIONS

SENSOR

Sensor	Sony IMX183
Type	CMOS Rolling Shutter
Resolution	20 MP (5472x3648)
Pixel Pitch	2.4 µm x 2.4 µm
Active Area	15.86 mm diagonal

PERFORMANCE SPECIFICATIONS

FPN	< 0.02% of signal
PRNU	< 0.1% of signal
Dynamic Range	73.6 dB
Bit Depth	12-bit
Color Data Formats	Bayer 8, Bayer 12 Packed, Bayer 16 & YUV422
Mono Data Formats	Mono 8, Mono 12 Packed & Mono 16

FRAME RATES

Resolution	Free Running
5472 x 3648	20 fps

Frame rates will vary based on host system and configuration

INTERFACES

Interface | Date rate	USB 3.0 | Micro-B | 5Gbps
Trigger Mode 0	Software

MECHANICALS

Dimensions (mm)	80.88 x Ø54.01 (without lens mount)
Weight (g)	218.5 (without optics)
Mounting	C-Mount

ENVIRONMENTAL & REGULATORY

Compliance	FCC, CE & RoHS
Shock & Vibration	300 G & 20 G (10Hz - 2KHz)
Operating Temperature	0°C to 50°C
Storage Temperature	-45°C to 85°C

SOFTWARE

Pixelink Capture	Capture, control, measure & operate
Pixelink SDK	Software Development Kit
Pixelink µScope	Acquisition, analysis & reporting
3rd. Party U3V Vision Applications	

COMPUTER & OPERATING SYSTEM

	Windows	Linux x86 64-bit	Linux ArmV7	Linux ArmV8
Processor	Intel i5 or better	Intel i5 or better	Arm7 (32 bit)	Arm8 (64 bit)
Memory	4GB recommended	4GB recommended	2GB	2GB
Hard Drive Space	150 MB	150 MB	50 MB	50 MB
Operating System	Windows 7/8/10	Ubuntu 14.04/16.04 18.04	Ubuntu 14.04/16.04	Ubuntu 14.04/16.04

POWER REQUIREMENTS

Voltage Required	5V DC (from USB connector)

Aegis Electronic Group, Inc.

AVAILABLE CONFIGURATIONS

M20DC-CYL
M20DC-KIT-CYL
M20DC-SE-CYL
M20DC-PRO-CYL

M20DM-CYL
M20DM-KIT-CYL
M20DM-SE-CYL
M20DM-PRO-CYL

Housing
CYL = Cylindrical Case

Sofware Included
KIT = µScope Essentials
SE = µScope Standard
PRO = µScope Professional

Aegis (888)687-6877
ELECTRONIC GROUP, INC
aegis-g2@aegiselect.com

Pixelink® A NAVITAR COMPANY

For more information please contact Aegis Electronic Group, Inc. *(888)687-6877 *aegis-g2@aegiselect.com *http://www.aegiselect.com

Pixelink®
A NAVITAR COMPANY
M20

MECHANICAL DRAWINGS & RESPONSIVITY CURVES

MECHANICAL DRAWINGS

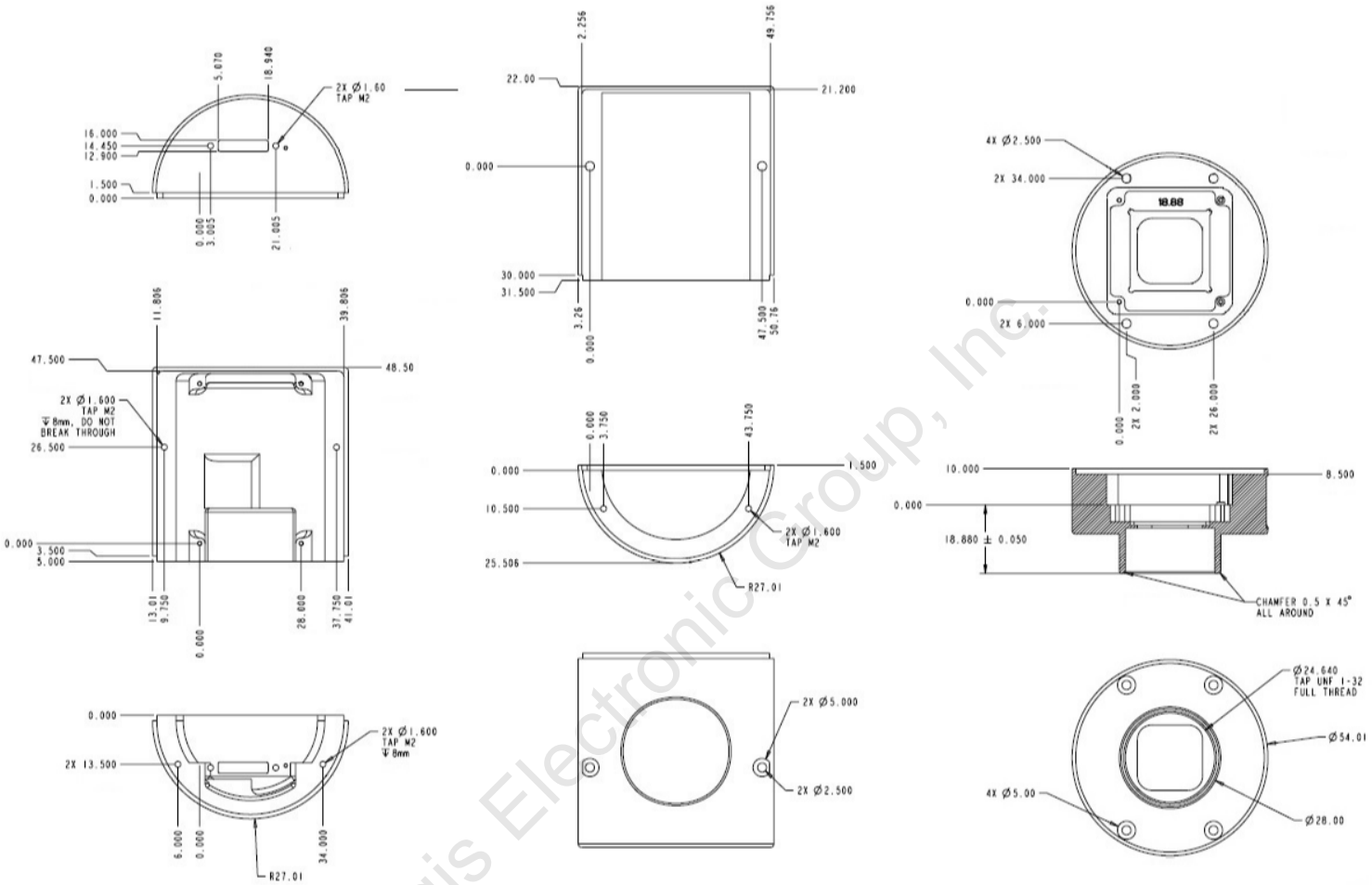

RESPONSIVITY CURVE - COLOR

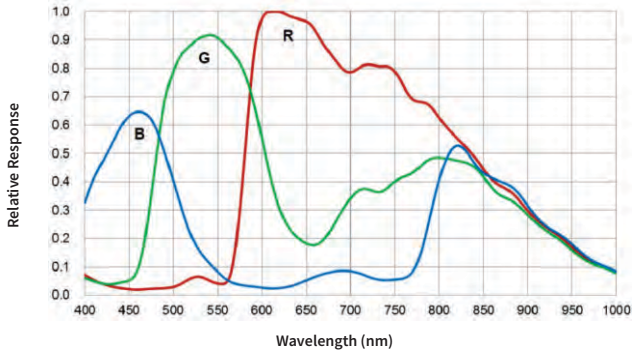

RESPONSIVITY CURVE - MONO

Aegis Electronic Group, Inc.

Aegis
(888)687-6877
ELECTRONIC GROUP, INC
aegis-g2@aegiselect.com

Pixelink® A NAVITAR COMPANY M20

PIXELINK'S INDUSTRY LEADING SOFTWARE

PIXELINK µSCOPE

Pixelink µScope is a software tool developed for the Microscopy marketplace. It gives users the ability to quickly and easily capture, measure and enhance images. In addition to this it can also correlate image data effectively and output the data in a format that can be further analysed by other software packages.

Pixelink µScope Essentials (ES) Software is an easy-to-use robust image capture tool optimized for productivity. **Pixelink µScope Standard (SE)** Software has added features, making it a highly productive image capture tool for microscopy. **Pixelink µScope Pro (PRO)** Software is for users needing more advanced tools for their microscopy requirements. This feature-rich application includes tools such as z-axis, extended focus imaging, shading correction, and reflected light subtraction.

PIXELINK SDK

Providing full control of all camera functions, the **Pixelink Software Developers Kit (SDK**) is the software package of choice for developers and system integrators who are integrating Pixelink cameras into their applications. The Pixelink SDK provides access to the full Pixelink Application Programming Interface (API) and provides sample applications, wrappers for many 3rd party controls, such as LabVIEW, along with full documentation.

The Pixelink SDK is compatible with Microsoft Windows and popular Linux platforms. When using the Pixelink SDK, developers can integrate Pixelink cameras into their custom applications with ease.

PIXELINK CAPTURE

Pixelink Capture is powerful multi-camera software application designed to configure "n" numbers of cameras and stream "n" number of cameras simultaneously in real-time high-quality video viewed in a multi-window environment. Pixelink Capture offers options for complex image enhancements such as; exposure control, filtering, frame-by-frame property changes in addition to multi-camera application testing and configuration.

Pixelink Capture also provides features to measure supporting; point, line, circle, rectangle, polyline and polygon measurements while determining pixel location. After creating spatial calibration, the user can then review and adjust before exporting the findings to an Excel spreadsheet for further analysis. Pixelink Capture also has integrated lens control (zoom & focus) for Navitar motorized lenses and accurate autofocus options for Navitar motorized fine focus mechanisms.

Aegis Electronic Group, Inc.

Aegis (888)687-6877
ELECTRONIC GROUP, INC
aegis-g2@aegiselect.com