This information is brought to you by:

ELECTRONIC GROUP, INC
480-635-8400 p * aegis-g2@aegiselect.com
http://www.aegis-elec.com

SRMHT-15 Series

15" Sunlight-Readable Touch Screen Monitors

- Produce Clear, Sharp Images Even in Direct Bright Sunlight
- 5-Wire Resistive Touch or Capacitive Touch
- 1,500 -1,700 Nits Brightness
- Auto Re-Start After Power Loss
- ***TRU-Tuff*** Treatment Ensures Maximum Shock & Vibration Resistance
- Lockable On-Screen Display Controls
- 3-Year Warranty

The SRMHT-15 Series Sunlight Readable Touch Screen monitors are designed to operate in direct bright sunlight, or in other high ambient-light conditions. They utilize state-of-the-art LED backlights to produce over 1,000 nits of brightness (vs. 250-300 nits for standard monitors). This results in amazingly bright, crystal-clear images, even with direct, bright sunlight on the face of the screen. The SRMHT-15 Series Sunlight Readable Touch Screens are ideal for use in a wide range of industrial, law enforcement, aviation, marine, military, inspection, advertising and transportation applications where viewability in direct bright sunlight is crucial.

All **TRU-Vu** industrial LCD monitors are specifically designed for use in demanding applications. Every **TRU-Vu** monitor utilizes industrial-grade components and high-end LCD panels not found in retail/consumer-grade monitors. This ensures superior image quality, improved performance and greater durability. Our 3-Year Warranty ensures you of reliable worry-free operation. Visit www.TRU-VuMonitors.com for more details..

Aegis Electronic Group
www.aegiselect.com

	Specifications		
MODEL	**SRMHTR-15V**	**SRMHTR-15C**	**SRMHTC-15C-17**
LCD Panel	15" Color LCD; LED Backlights		
Touch Technology	5-Wire Resistive Touch		Capacitive
Touch Interface	USB		
Resolution	1024 x 768 (XGA)		
Viewable Area	11.97" (W) x 8.98" (H) (304.13 x 228.10 mm)		
Pixel Pitch	0.297mm x 0.297mm		
Display Colors	16.2 M		
Aspect Ratio	4:3		
Brightness	1,500 nits		1,700 nits
Contrast Ratio	700:1		
Viewing Angle	170° (H) x 160° (W)		
Response Time	8 msec Trf		
Control	OSD (On-Screen Display) via Front Panel Pushbuttons		
VIdeo Inputs	VGA	VGA, DVI	
Power Requirement	12 VDC (2.1 mm Barrel Plug); 90-240 VAC via Included Power Brick		
Power Consumption	48 Watts		
Enclosure	ABS		
Mounting	Included Base or 75x75mm VESA Hole Pattern		
Operating	+32° to +140° F (0° to +60° C)		
Humidity	8-90%RH		
Shock	50 G (20 msec, ½ sine)		
Vibration	1.5G RMS 10-200 HZ		
Approvals	UL/cUL, FCC, CE, TUV, RoHS		
Dimensions	13.66" (W) x 10.87" (H) x 1.78" (D) (347 x 276 x 45.20 mm)		
Weight	4.87 lbs. (2.21 kg)		

SRMHT-15 Series

15” Sunlight Readable Touch Screen Monitors

Dimensions:

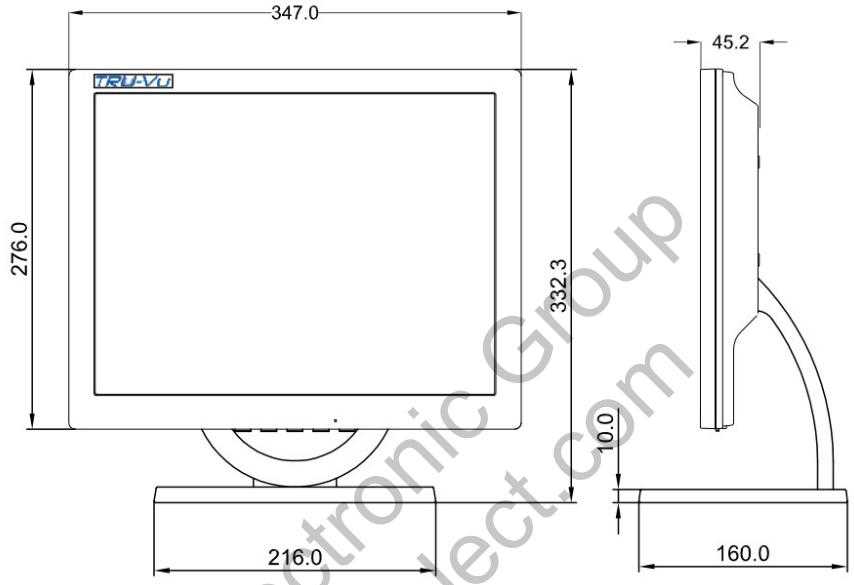

Standard Accessories:

- 90-240 VAC Power Brick
- VGA Cable
- Tabletop Base

Available Options:

- 1,700 Nits LCD Panel
- Optical Bonding
- Waterproof Enclosure
- Stainless Steel Enclosure
- Protective Anti-Reflective Glass
- Speakers
- Wall Mount Brackets
- Panel Mount
- Rack Mount
- Open-Frame Configuration
- Private Label
- Other Customer - Specific Modifications

Aegis Electronic Group
www.aegiselect.com